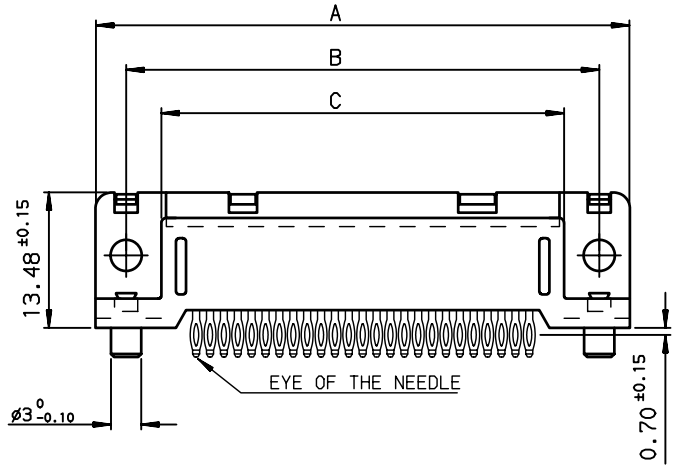

View sshown without plastic pin

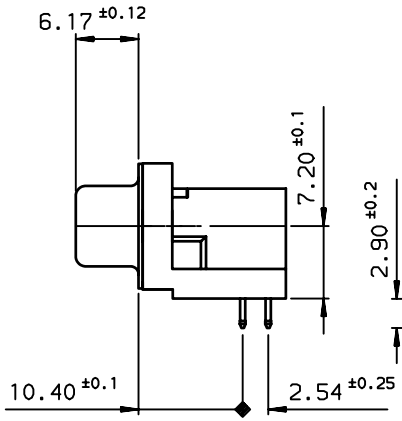

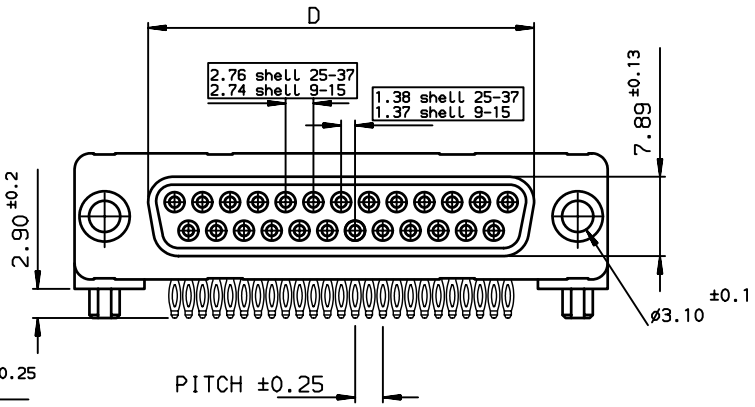

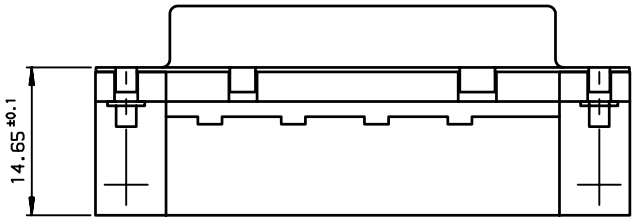

Detail of integral plastic pin

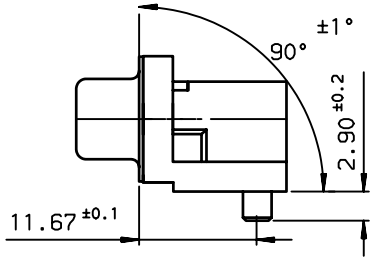

PC card drilling dimensions(after plating)

(thickness 1.60 ±0.20)

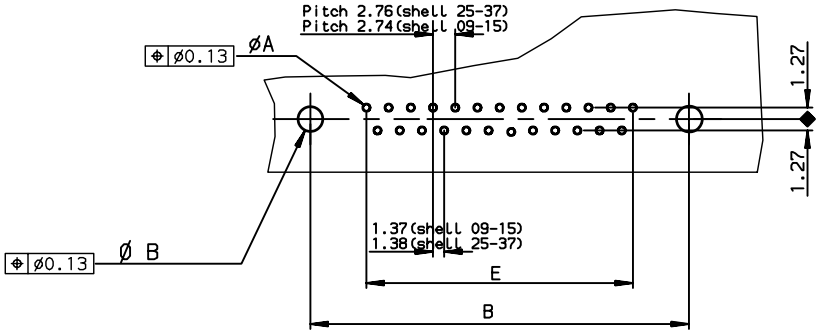

TIN LEAD PART NUMBER

SHELL	A±0.38	B±0.12	C±0.10	D±0.25	E±0.07	PART NUMBER	PART NUMBER
09	30.81	24.99	18.00	16.21	10.96	D09S81C4PA00	D09S81C6PA00
15	39.14	33.32	26.32	24.54	19.18	D15S81C4PA00	D15S81C6PA00
25	53.03	47.04	40.04	38.25	33.12	D25S81C4PA00	D25S81C6PA00
37	69.32	63.50	56.50	54.71	49.68	D37S81C4PA00	D37S81C6PA00
						Gold flash	0,76 µ gold

LEAD FREE PART NUMBER

SHELL	A±0.38	B±0.12	C±0.10	D±0.25	E±0.07	PART NUMBER	PART NUMBER
09	30.81	24.99	18.00	16.21	10.96	D09S81C4PA00LF	D09S81C6PA00LF
15	39.14	33.32	26.32	24.54	19.18	D15S81C4PA00LF	D15S81C6PA00LF
25	53.03	47.04	40.04	38.25	33.12	D25S81C4PA00LF	D25S81C6PA00LF
37	69.32	63.50	56.50	54.71	49.68	D37S81C4PA00LF	D37S81C6PA00LF
						Gold flash	0,76 µ gold

GENERAL CHARACTERISTICS AND ROHS INFORMATIONS:

SEE DRAWING C01-8646-0001

European Views

rev	ecn no	dr	date
D	-	MAS	1999/07/23
E	LS05-004	MPE	2005/02/10
F	LS06-0095	LGO	2006/06/28
G	LS06-0186	LGO	2006/09/25
-	-	-	-
-	-	-	-
-	-	-	-

www.fciconnect.com

surface ISO 1302 ✓ | tolerance std ISO 406 ISO 1101 | projection | mm

TOLERANCES UNLESS OTHERWISE SPECIFIED

Dr	PESSON	1995/03/10	ANGULAR	LINEAR	0.X ±0.1
Eng	PESSON	1995/03/10			0.XX ±0.1
Chr	LEGARE	1995/03/10	0.XX° ±2°		0.XXX ±0.1
Appr	LEGARE	1995/03/10	Product family		D-SUB

size A3 | Scale 2

ECN LS06-0186

Spec ref -

title: FEMALE CONNECTOR DELTA D EUROPE
right angled press fit

dwg no C01-8646-0345 | Rev. G

catalog no -

CUSTOMER | sheet 1 of 1

REV F - 2006-04-17

Copyright FCI.

PDM: Rev:G STATUS:Released Printed: Jan 18, 2011