NOTES:
1. MATERIALS AND FINISHES:
   BODY -- BRASS, ALBALOY PLATING
   SHOULDER RIVET -- BRASS, NICKEL PLATING
   CHAIN ASSEMBLY -- BRASS, NICKEL PLATING

THIRD ANGLE PROJ.

REVISIONS

| REV | DESCRIPTION | DATE | ECO | APPR |
|---|---|---|---|---|
| H | REVISED PHT | 1-16-75 | | TTTB |
| J | ADDED NOTES 5 # 6 | 9-25-92 | | DR |
| K | RELEASE IN ARFA. | 03-Apr-09 | | SCOTT |

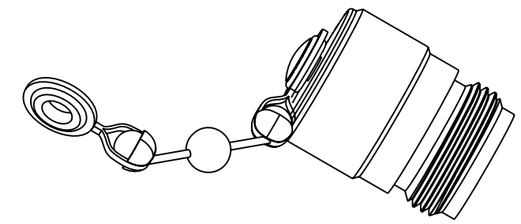

SCALE 1.500

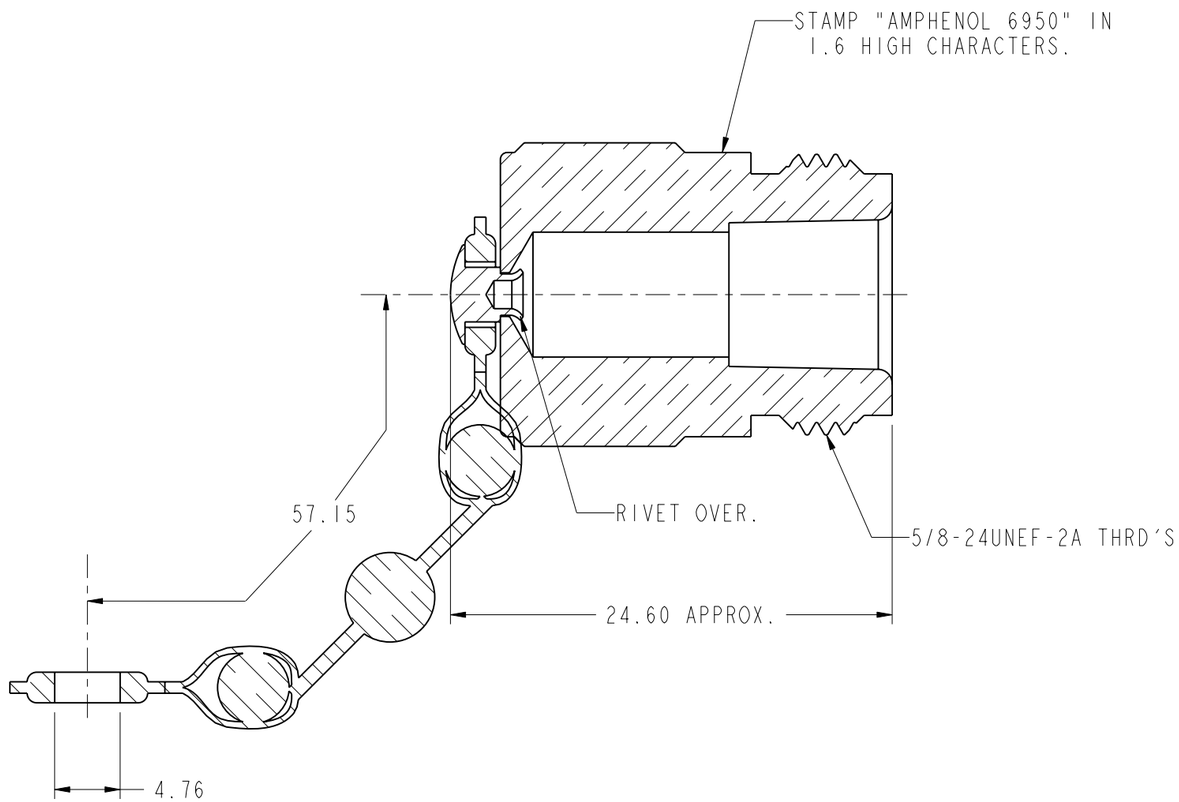


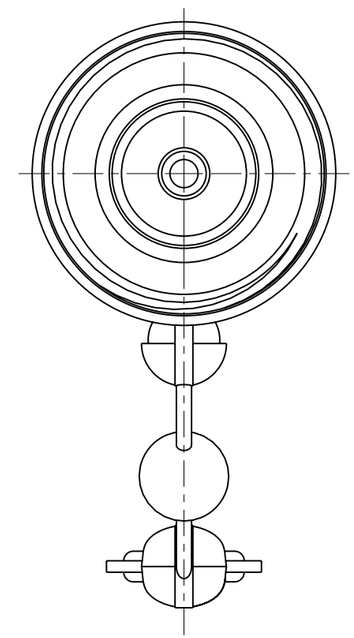

**CUSTOMER OUTLINE DRAWING**

ALL OTHER SHEETS ARE FOR INTERNAL USE ONLY

UNLESS OTHERWISE SPECIFIED, DIMENSIONS ARE IN METRIC AND TOLERANCES ARE:

| 0.5 - 6mm | 6 - 30mm | 30 - 120mm | ANGLES |
|---|---|---|---|
| ±0.1mm | ±0.2mm | ± 0.3mm | ±1° |

NOTICE - These drawings, specifications, or other data (1) are, and remain the property of Amphenol corp. (2) must be returned upon requiest; and (3) arre confidential and not to be disclosed to any person other than those to whom they are given by Amphenol Corp. the funishing of these drawings, specifications, or other data by Amphenol Corp., or to any other person to anyone for any purpose is not to be regarded by implicatioin or otherwise in any manner licensing, granting rights to permitting such holder or any other sperson to manufacture, use or sell any product, process or design, patented or otherwsie, that may in any way be related to or disclosed by said drawings, specifications, or other data.

MATERIAL

REFERENCE

FINISH

| | | |
|---|---|---|
| DRAWN J.R.B | DATE 5-20-64 | |
| ENGINEER TTTB | DATE 5-21-64 | |
| APPROVED WMS | DATE 5-22-64 | |
| CAD FILE I:\N\6950 | | |

TITLE
TYPE "N" PLUG
DUST CAP

| SCALE: 3.0:1.0 | SHEET 1 OF 1 | |
|---|---|---|
| DWG SIZE B | CODE ID 74868 | REV K |

Amphenol RF
Danbury CT USA, Tainan, Taiwan, Shenzhen, China
www.amphenolrf.com

DRAWING NO. 6950
ITEM NO. 6950
PART NO. 6950