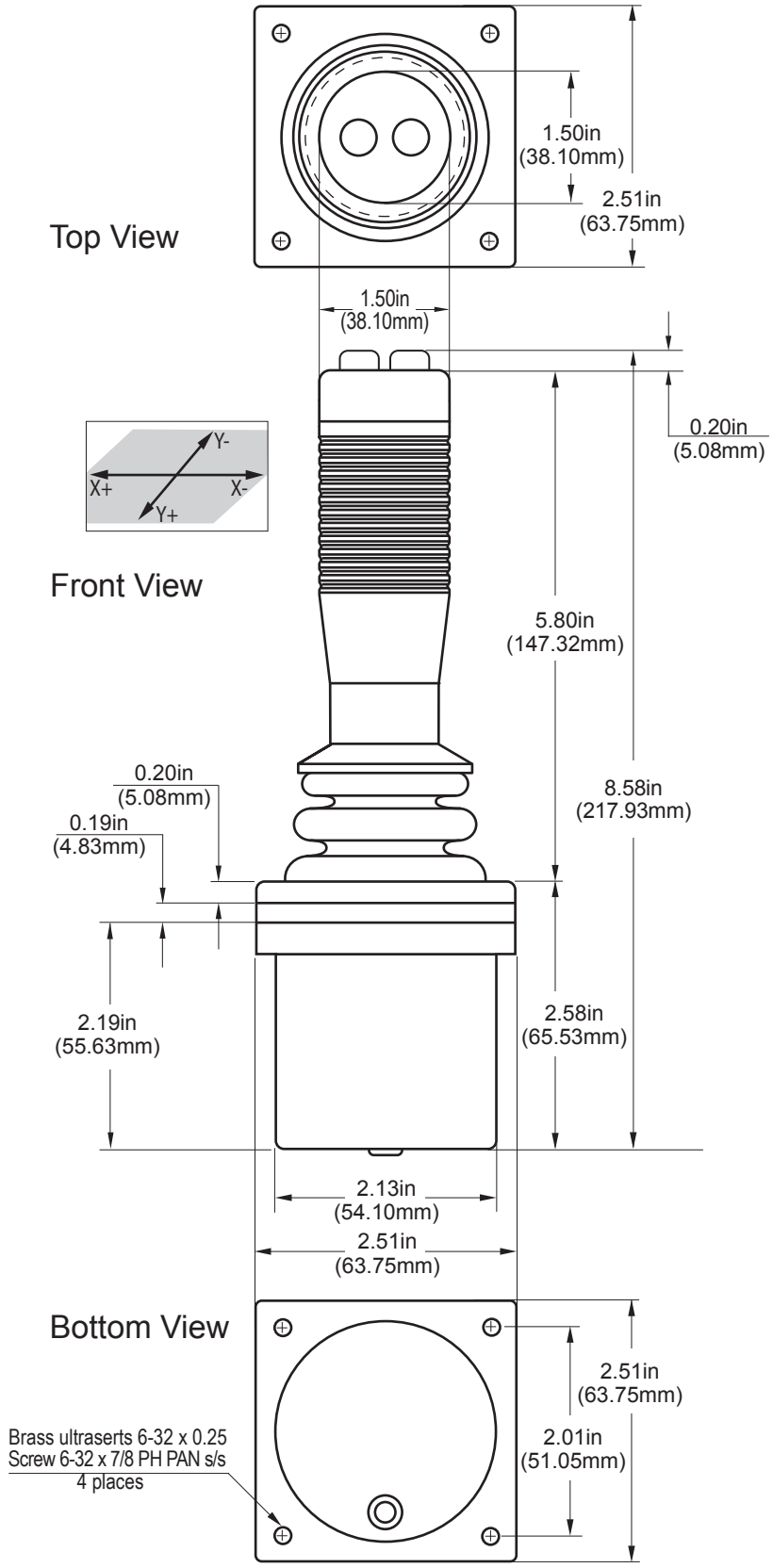

Note: Actual strain relief position may vary from specifications.

SPECIFICATIONS

ELECTRICAL

SUPPLY VOLTAGE	5.0V DC
CENTER VOLTAGE	2.5V DC
SUPPLY CURRENT	10mA max/axis
OUTPUT CURRENT	2mA max/axis
EFFECTIVE OUTPUT	0V – 5V DC
OUTPUT TOLERANCE	±2%

MECHANICAL

OPERATING TRAVEL	40° (20° from center)
CENTERING	Single spring, omnidirectional
BREAKOUT FORCE	0.544Nm
OPERATING FORCE	0.653Nm
MAXIMUM FORCE	1.306Nm
OPERATING TEMP	-40°C to +85°C
LIFE EXPECTANCY	10 million operations

WIRING

RED	Supply voltage
BLACK	Ground
BLUE	X-Axis
YELLOW	Y-Axis
ORANGE	Switch 1
VIOLET	Switch 2
WHITE	Switch common

RoHS compliant

CH Products

P/N **MS-42N20S000** REV **A**

DESCRIPTION Series III – 2 Axes, Stock Grip, 2 Top Buttons

PROPRIETARY AND CONFIDENTIAL
THE INFORMATION CONTAINED IN THIS DRAWING IS THE SOLE PROPERTY OF CH PRODUCTS. ANY REPRODUCTION IN PART OR AS WHOLE WITHOUT THE WRITTEN PERMISSION OF CH PRODUCTS IS PROHIBITED.