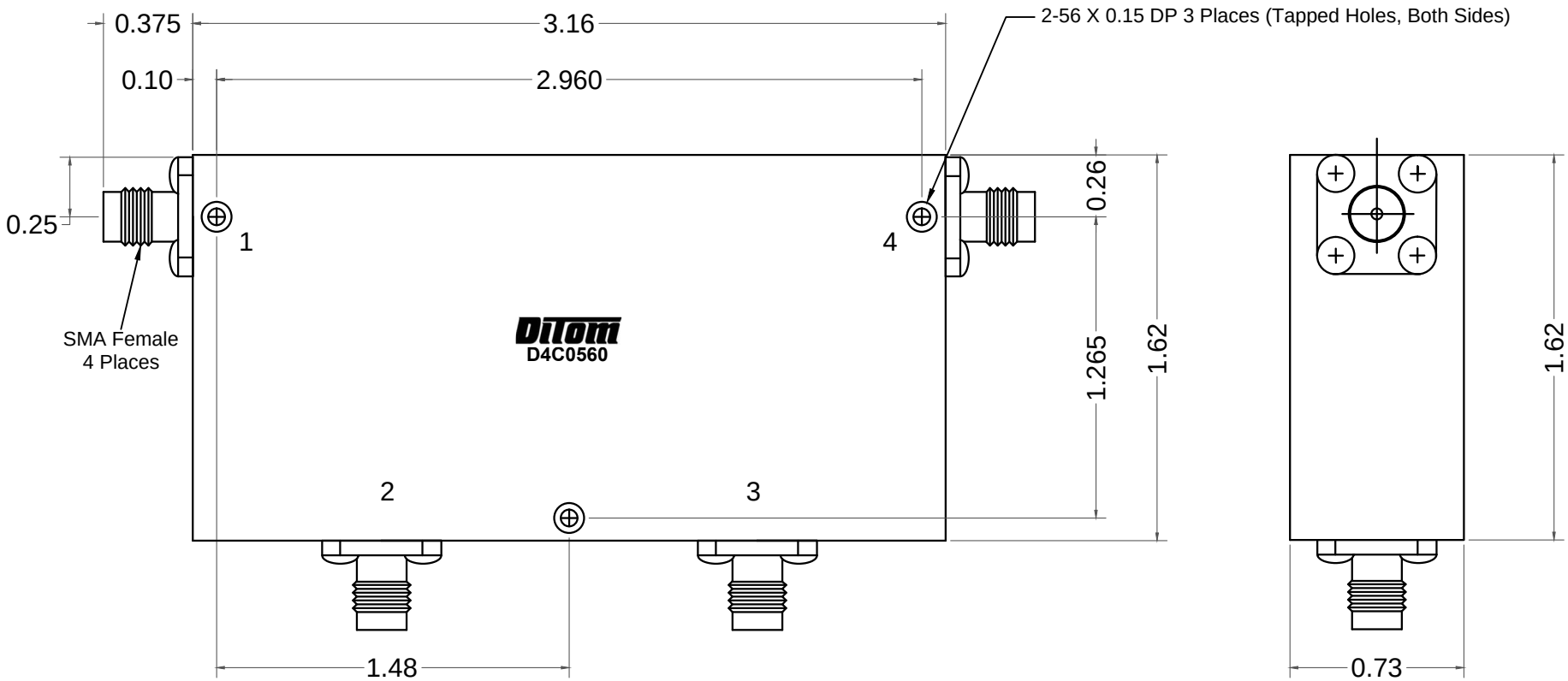

ELECTRICAL SPECIFICATIONS

FREQUENCY RANGE (GHz):		0.525 - 0.600	
ISOLATION (dB):		20 MIN	(PER JUNCTION)
INSERTION LOSS (dB):		0.40 MAX	(PER JUNCTION)
VSWR:		1.25 MAX	
POWER:	AVG (ALL PORTS):	300 W	
	PEAK:	2kW	

MECHANICAL SPECIFICATIONS

CONNECTORS:	SMA-FEMALE, STAINLESS STEEL, PASSIVATE
CONTACT PINS:	BERYLLIUM COPPER, GOLD PLATE
OPERATING TEMPERATURE:	-20° to +65°C
WEIGHT (APPROX):	9.30 OUNCES

DIMENSIONS IN INCHES, UNLESS OTHERWISE SPECIFIED	DiTom MICROWAVE INC. Fresno, California, USA
TOLERANCE XX±0.03 XXX±0.010	TITLE 0.525 - 0.60GHz SMA Circulator
SCALE 3:1	MODEL NO D4C0560 / REV