TOP VIEW

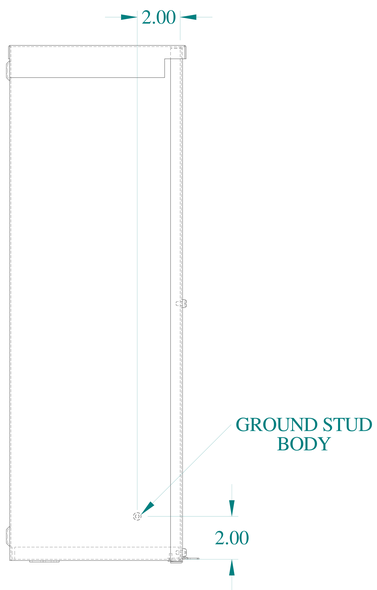

SIDE VIEW

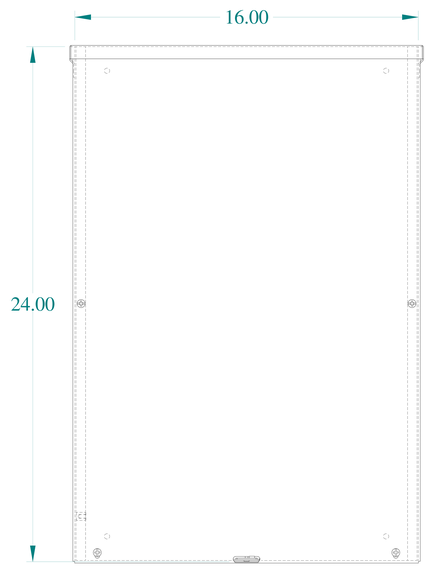

FRONT VIEW

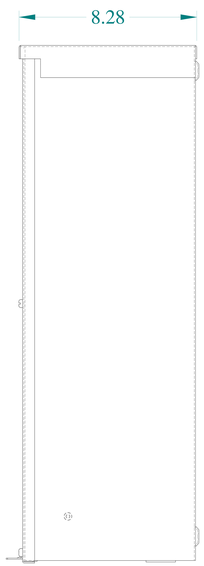

SIDE VIEW

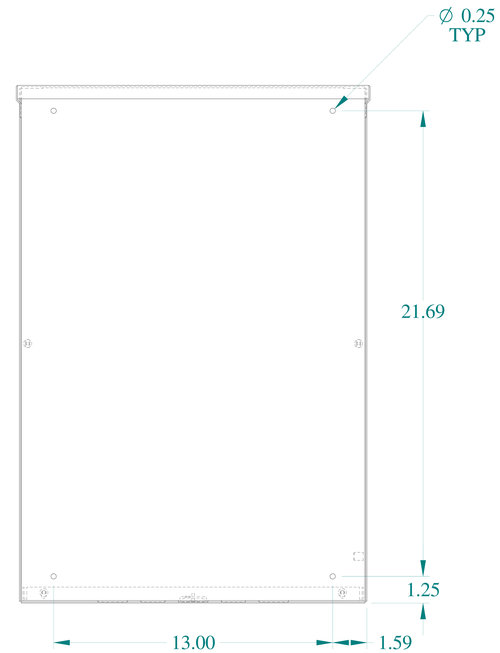

BACK VIEW

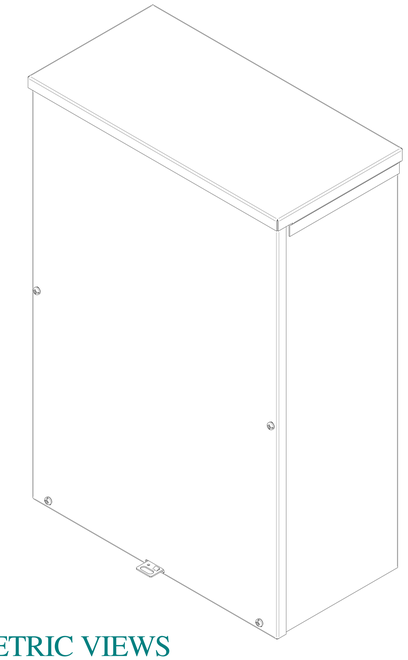

ISOMETRIC VIEWS

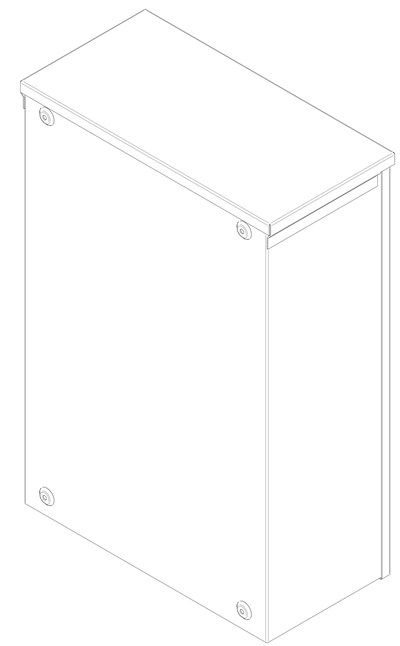

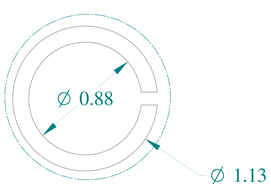

DETAIL Y
TYP

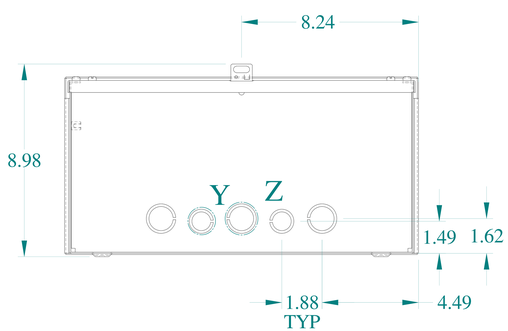

BOTTIOM VIEW

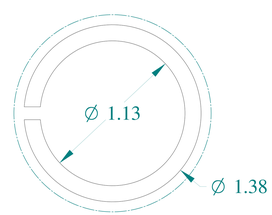

DETAIL Z
TYP

HAMMOND MANUFACTURING®

www.hammondmfg.com

Data subject to change without notice.

Part # : C3R24168SC	Date : Mar. 23, 2019

Link:www.hammfg.com/C3R24168SC