Alle Rechte vorbehalten/ *All rights reserved*

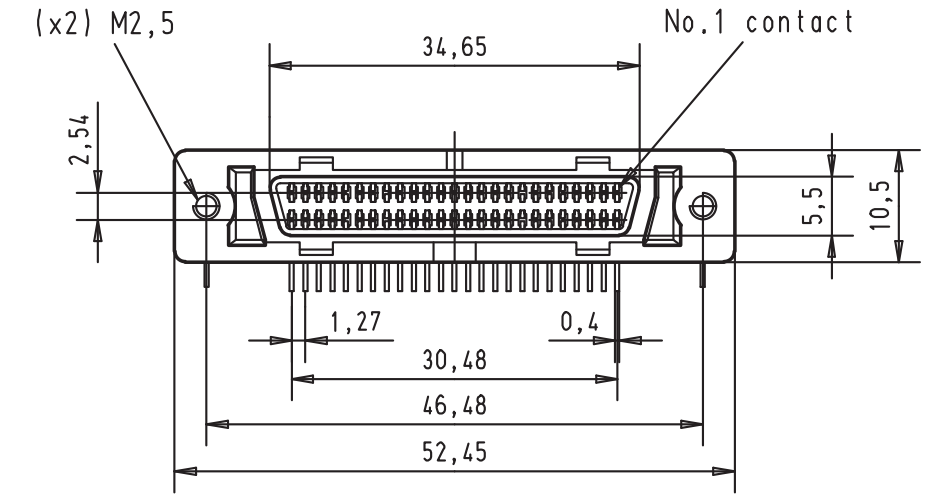

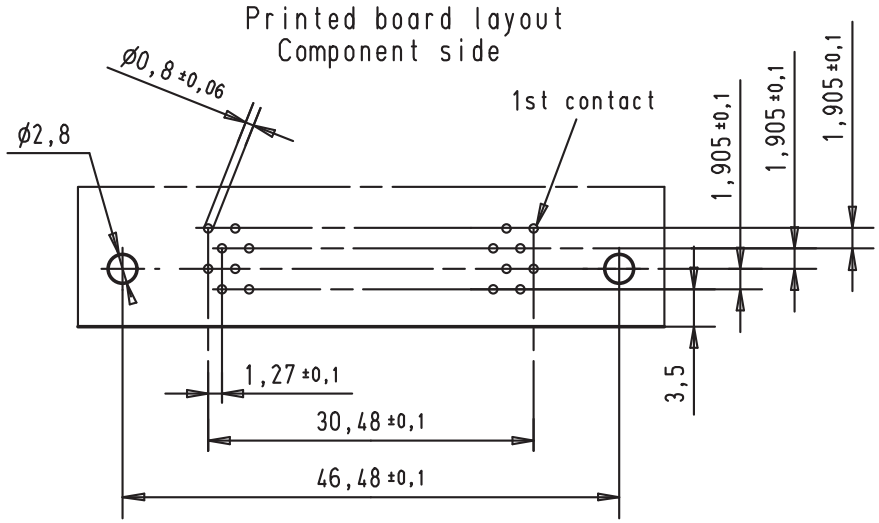

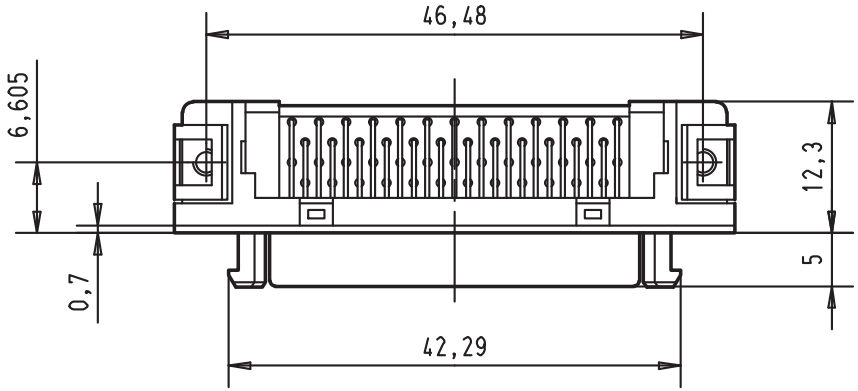

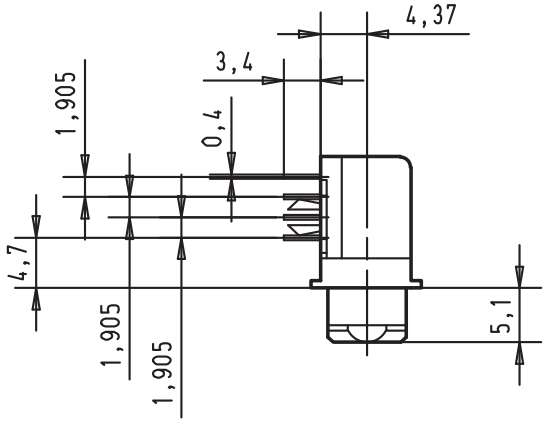

				Dat.	Name		har.mik® I/O pin/socket	Maßstab/ Scale
			Detail.	30-AUG-00	JB	All Dim. in mm Orig. Size DIN A 4	Female connector 50 poles with angled solder pins, clips and fixed latching	1,5:1
			Insp.					
			Stand.					
27941	30-AUG-00	JB	HARTING EURL F-95972 Paris				TB 60 01 050 5140	Blatt/Page 1/1
Mod.	Dat.	Name					Sub.	