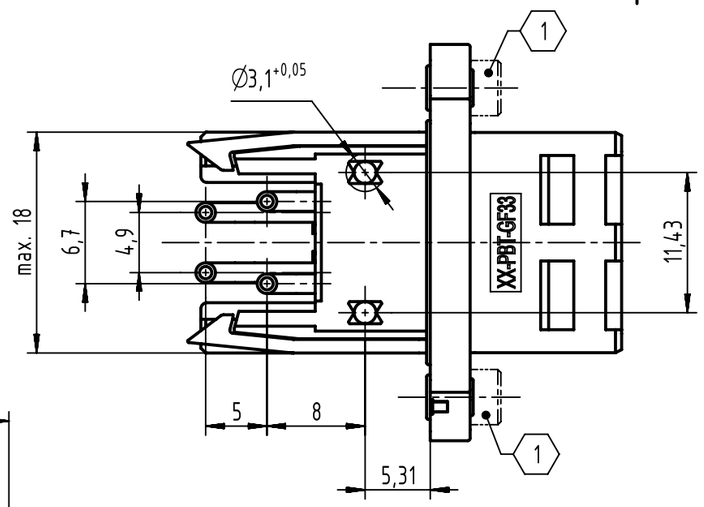

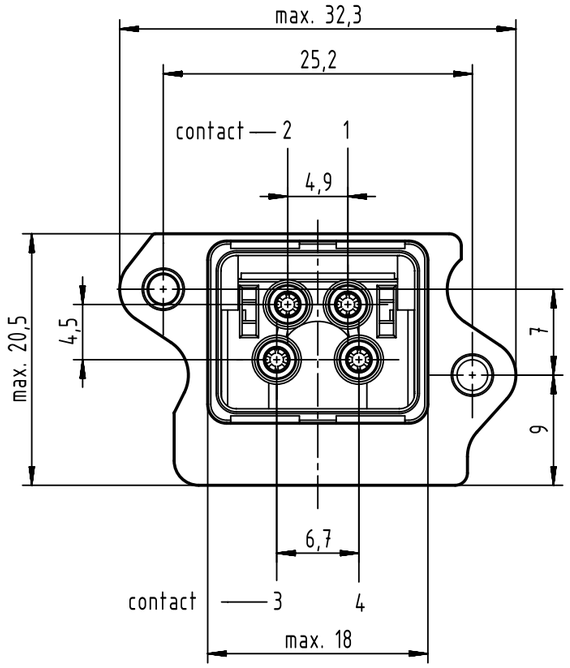

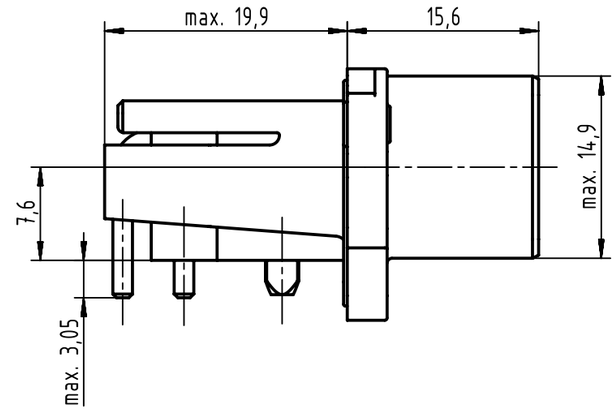

panel cutting

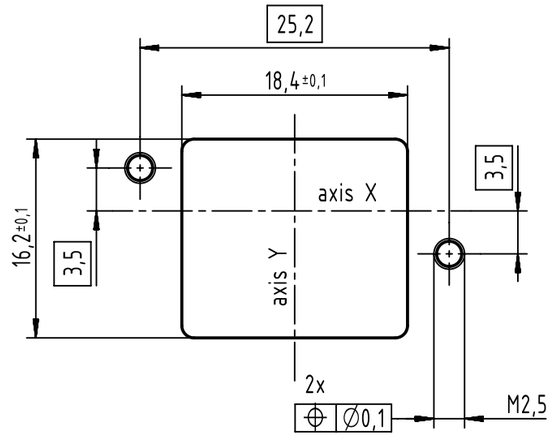

connector pitch on panel:
axis X = 27mm and axis Y = 21mm (2)

panel thickness = max. 5.5mm

PCB layout

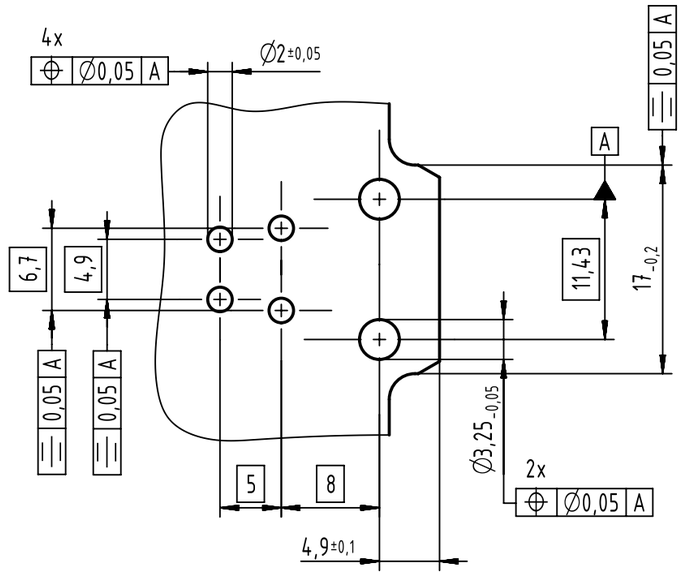

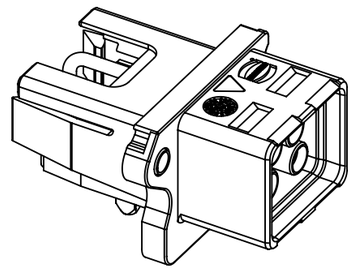

(2) connector pitch with coding clip 0945840002X Y = 23mm

(1) 2x M2.5; screws acc. to ISO 4762;
please order separately; bolting torque 0.3Nm - 0.5Nm

further information see: DS 09466101400

All Dimensions in mm Original Size DIN A3	Scale 2:1	Free size tol.		Ref. Sub. TB 09462454020 / ECM 500000117442 / 2017-04-07	
All rights reserved Department EL PD	Created by ELLERMANN	Inspected by ZWAHR	Standardisation KOHLER	Date 2018-05-30	State Final Release
HARTING Electronics GmbH D-32339 Espelkamp	Title HARTING PushPull V4 Compact Housing 48V/12A				Doc-Key / ECM-Nr. 100671824/UGD/000/D 500000135700
	Type TB	Number 09462454020		Rev. D	Page 1/1

A3