MICRO SWITCH
FREEPORT ILLINOIS, U.S.A.
A DIVISION OF HONEYWELL
FED. MFG. CODE 91929

SWITCH—BASIC

CATALOG LISTING
YZ-3RW845547-A2-S

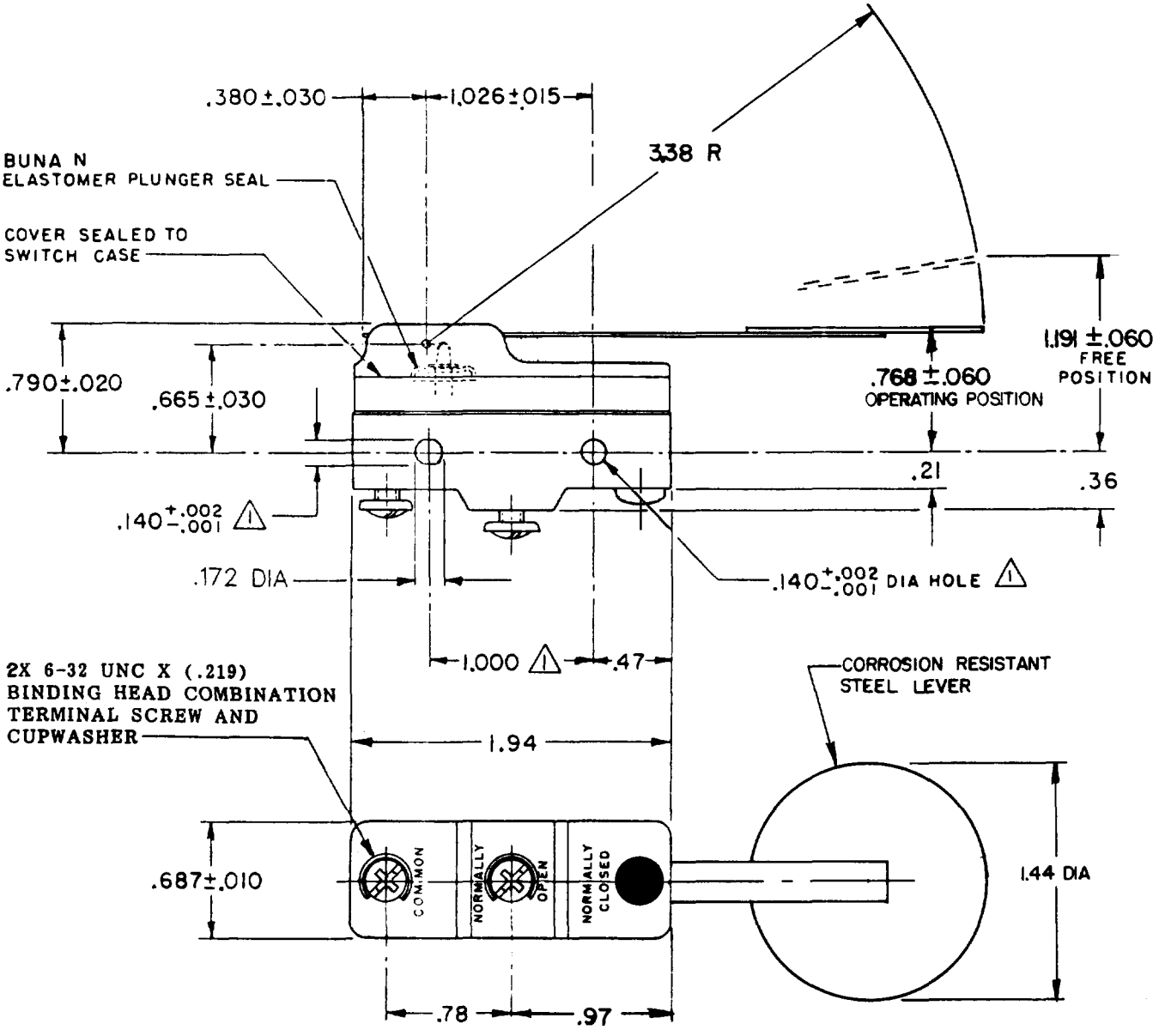

NOTES
1. MOUNTING HOLES WILL ACCEPT PINS OR SCREWS OF .139 MAX DIA ON 1.000±.002 CENTERS
2 - SEALED CONSTRUCTION PROVIDES SPLASH RESISTANCE

THIS DRAWING COVERS A PROPRIETARY ITEM AND IS THE PROPERTY OF MICRO SWITCH, A DIVISION OF HONEYWELL. THIS DRAWING IS NOT TO BE COPIED OR USED WITHOUT THE APPROVAL OF MICRO SWITCH.

THIRD ANGLE PROJECTION

CHARACTERISTICS

OPERATING FORCE------ 18 GR MAX

RELEASE FORCE-------- 3 GR MIN

DIFFERENTIAL TRAVEL-----.021-.107

OVERTRAVEL----------.312 MIN

ELECTRICAL DATA

CONTACT ARRANGEMENT
S P N O

L96
15A 125, 250 OR 480 VAC
1/8 HP 125 VAC, 1/4 HP 250 VAC
1/2A 125 VDC, 1/4A 250 VDC

L288
L299
L306
16A 250V ~ T85 5E4

SCALE FULL

DO NOT SCALE PRINT

TOLERANCES
APPLY TO DESIGN UNITS. CONVERSIONS ARE ONLY FOR REFERENCE. UNLESS NOTED, TOLERANCES ARE ±

	DIM. mm	TOL. mm/in	DIM. in	TOL. mm/in
NO PLACES	X	1/.04		
ONE PLACE	X.X	0.4/.016	X.X	0.8/.03
TWO PLACES	X.XX	0.15/.006	X.XX	0.38/.015
THREE PLACES			X.XXX	0.13/.005
ANGLES				

DESIGN UNITS SI METRIC ☐ US CUSTOMARY ■

WEIGHT .079 LB

CATALOG LISTING
YZ-3RW845547-A2-S
PAGE 1 OF 1

M

ISSUE 7

RELEASE NO. PR-8876

REVISION		
A	C048226	TSM 28 AUG 80
B	C057209	JAP 2 MAY 90
C	CO-73287-J	JAL 22 NOV 93
D	CO 77588	TSM 29 MAR 94
E	C093346	DLT 22 SEP 98
F	0000953	CSL 24 JUL 03

DRAWN JEF 9 JUNE 80
CHECKED GLH 12 JUNE 80
CHECK
APPROVAL

RASTER
50-52848-A