Mallory Sonalert Products, Inc.

Part #: **SC616NPR**

Sales Outline Drawing

Revision: **E**

Specifications:

Sound Level Category	Loud
Mode of Operation	Fast Pulse @ 2 - 10 PPS
Voltage Rating	6 to 16 VDC
Frequency	2900 ± 500 Hz
Loudness @ 2 FT	91 to 102 dB(A) Typ.
Loudness @ Min Vdc	80 dB(A) @ 2 Feet and 6 Vdc
Loudness @ Max Vdc	95 dB(A) @ 2 Feet and 16 Vdc
Current Draw	6-22mA
Duty Cycle (%)	50
Housing Material	6/6 Nylon, Color: Black
Storage Temperature	-40° to +85° C
Operating Temperature	-30° to +65° C
Panel Mounting	Recommended hole size is 1.25"(31.75mm). Thread front will fit standard 30mm(1.181") hole.
Knurled Nut	Used to attach part to panel. The max recommended torque is 10 in-lbs.
Weight (Typical)	1.6 oz (45g)
NEMA 3R,4X, & 12	Approved with use of ACC03.
Options	Please contact factory.

Dimensions: Inches (mm)

cUL Recognized **ROHS Compliant**

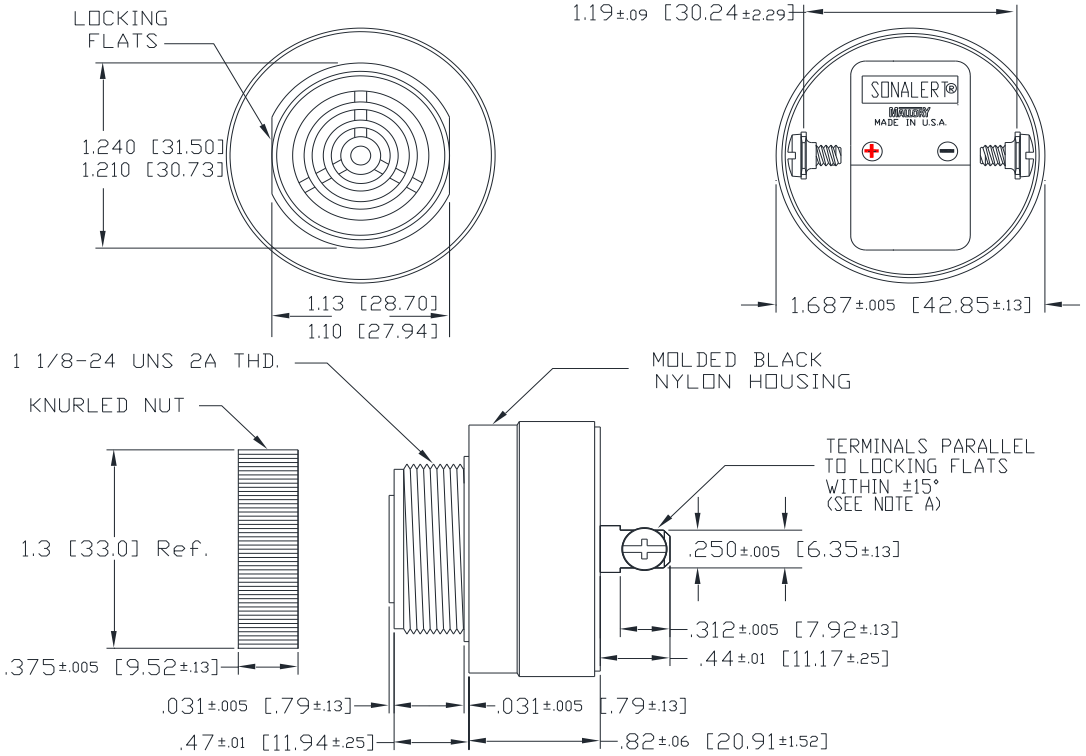

NOTE A: TERMINALS-.032 BRASS TIN PLATED, TAPPED FOR #6-32 SCREW. TWO #6-32 NICKEL PLATED BRASS SCREWS INCLUDED. WILL ACCEPT 1/4" QUICK CONNECT.

NOTE B: MOUNTING- REMOVE BLACK PLASTIC NUT AND INSERT THREADED FRONT THROUGH 1.25" HOLE PUNCHED IN PANEL, IF ORIENTATION IS NEEDED, NOTE LOCKING FLATS ON DRAWING. SCREW NUT BACK ON. DO NOT OVERTIGHTEN.

4411 South High School Road, Indianapolis, Indiana 46241 U.S.A · Phone: (317) 612-1000 Fax: (317) 612-1010 www.mspindy.com