2N5876 (#23870)

RFQ/Sample

PNP Transistor

Division	Lawrence	**Datasheet**	(none)
Mil-Spec	(none)		
Shipping	(none)	**Qual Data**	Contact Microsemi

Package

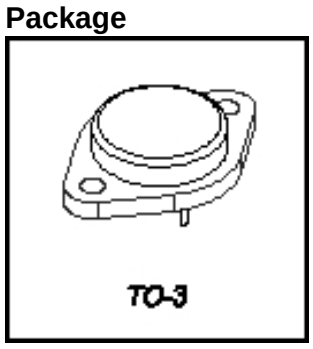

Maximum Electrical Rating	Symbol	Max	Unit
Power Dissipation	**Power**	150	W
Collector Current	I_C	10	A
Breakdown Voltage Collector -to-Base	$B_{V(CBO)}$	80	V
Voltage Collector to Emitter Open	V_{CEO}	80	V
Voltage Emitter to Base Open	BV_{EBO}	6	V

Electrical Rating	Symbol	Min	Typ	Max	Unit
Collector Emitter Saturation Voltage					
(I_B=0.5 mA, I_C=4 mA, T_A=25 ºC,300µ s pulse)	$V_{CE(sat)}$			1	V
DC Current Gain					
(I_C=4 mA, T_A=25 ºC,300µ s pulse)	**HFE**	20		100	

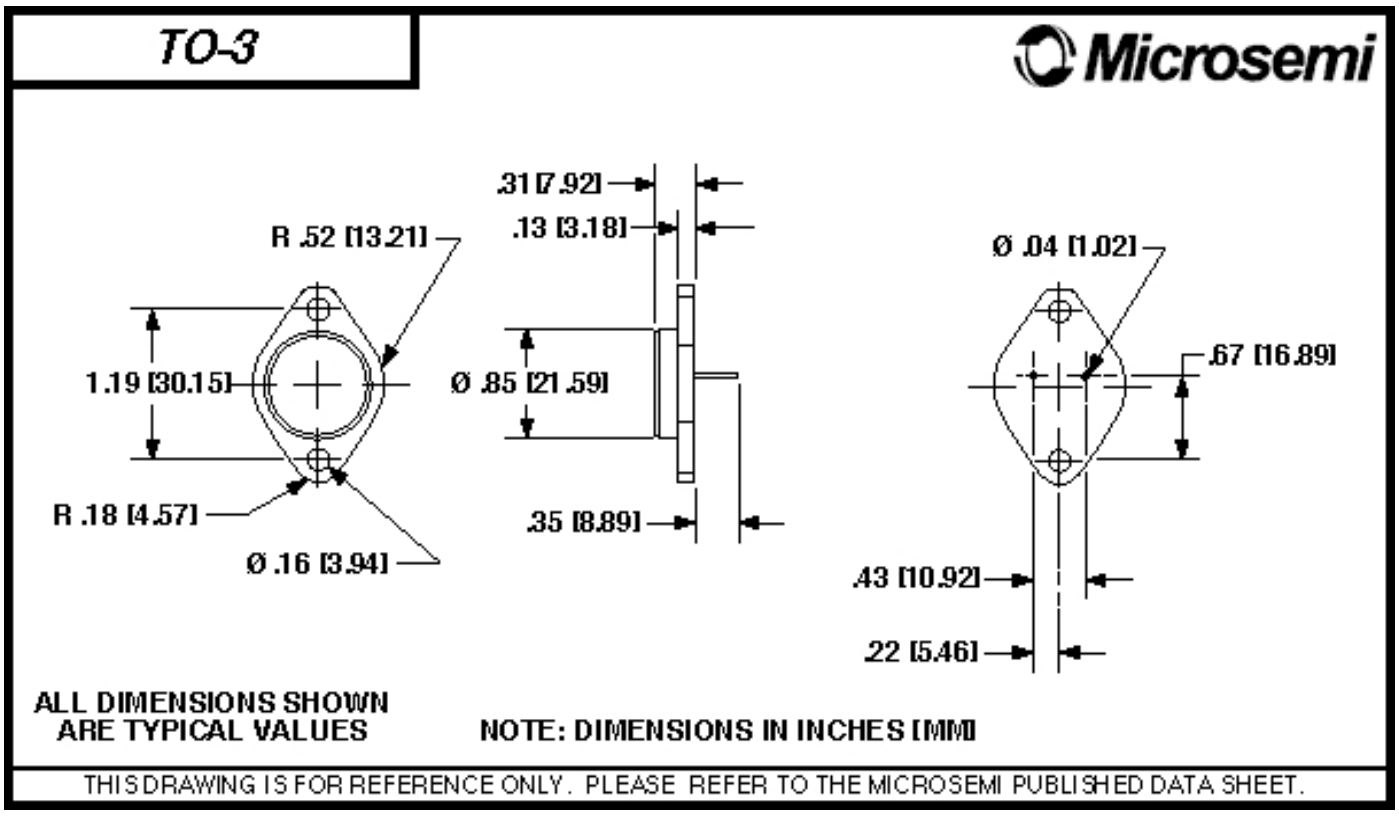

Copyright © 2007 Microsemi Corporation. All rights reserved