NOTES:

1. PARTS TO BE SUPPLIED AS LOOSE PIECES.
2. MATERIAL: POLYESTER 94V-0, NATURAL COLOR.

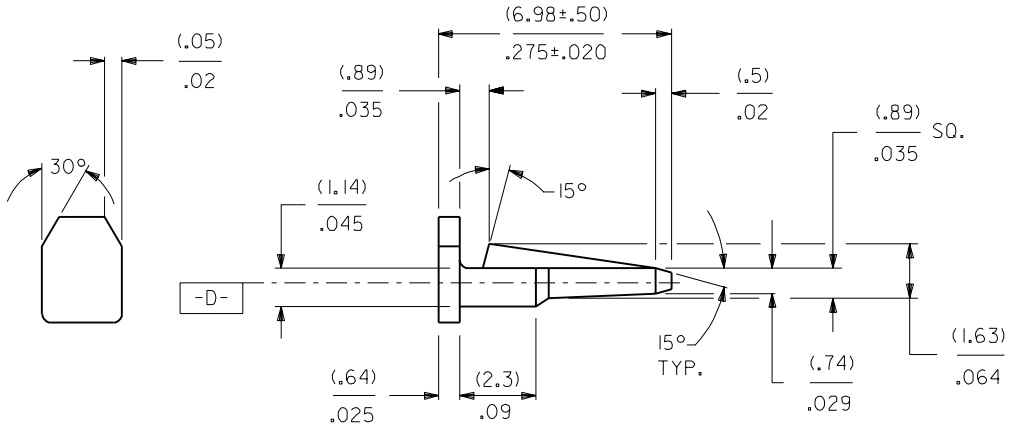

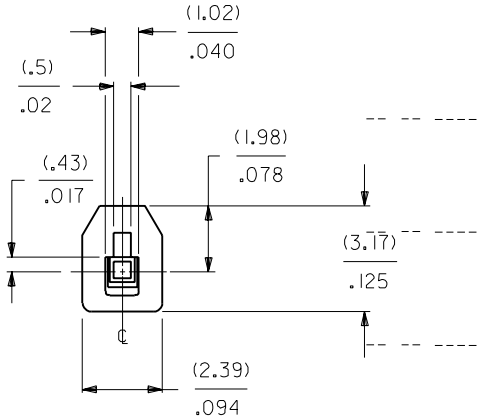

4161-1

15-04-9209

MFG.	SH.	REV.	LTR.	REVISIONS
			M	MAT'L WAS NYLON ECR U90661 8-14-89 A.GUZIK
L	2	L	L	REDRAW ON CAD ECR 10301 10-16-87 A.GUZIK
M	1	M		

DIMENSIONS SHOWN (METRIC) INCH

UNLESS OTHERWISE SPECIFIED TOLERANCES: ANGULAR ± 1/2°

	INCH	METRIC
3 PLACE	± .010	---
2 PLACE	± .014	± .25
1 PLACE	---	± .36

DRAFT WHERE APPLICABLE MUST REMAIN WITHIN DIMENSIONS

REVISE ONLY ON CAD SYSTEM

TITLE (POLARIZING KEY) FOR KK (2.54)/.100

MOLEX INCORPORATED LISLE, ILL. 60532 U.S.A.

SHEET NO. 1 OF 2 | DATE 10/16/87

PART NO. | DRWG. NO. SD-4161

DRWG. BY GUZIK | CHK'D. BY PATEL | APP'D. BY LENZ | SCALE :

FILE NAME S4161X1

THIS DRAWING CONTAINS INFORMATION THAT IS PROPRIETARY TO MOLEX INC. AND SHOULD NOT BE USED WITHOUT WRITTEN PERMISSION.

DIV. KK | SIZE B