THIS COPY IS PROVIDED ON A RESTRICTED BASIS AND IS NOT TO BE USED IN ANY WAY DETRIMENTAL TO THE INTERESTS OF PANDUIT CORP.

PANDUIT P/N	WEIGHT
CMRPSH20CM	7.6 LBS/EACH 3.5 Kg/EACH

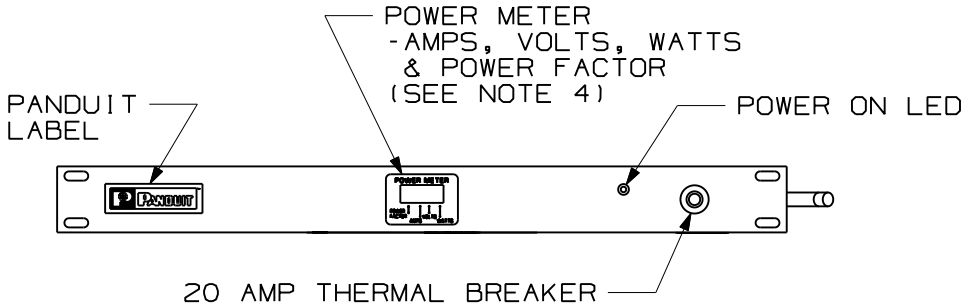

NOTES:

1. VISIT OUR ON-LINE CATALOG AT WWW.PANDUIT.COM FOR A CURRENT LIST OF PRODUCTS APPLICABLE FOR USE WITH THIS PART.
2. ACCESSORY COMPONENTS:
   (4) #10-32 X 1/2" MOUNTING SCREWS
   (4) #12-24 X 1/2" MOUNTING SCREWS
3. THE POWER STRIP SHALL HAVE THE FOLLOWING:
   -TEN (10) - NEMA 5-20R OUTLETS (5 DUPLEX 20 AMP RECEPTACLES)
   -10-FOOT POWER CORD WITH NEMA 5-20P PLUG
4. SCROLLING POWER METER DISPLAYS POWER FACTOR THAT HELPS TO IDENTIFY IF A CIRCUIT IS WASTING ENERGY, WHICH CAN CAUSE SIGNIFICANT DAMAGE TO ELECTRONIC EQUIPMENT AND HIGHER ENERGY COSTS. ALSO DISPLAYED IS AMPS, VOLTS AND WATTS, THAT ASSISTS WITH POWER MANAGEMENT BY ALLOWING THE USER TO JUDGE THE REMAINING CAPACITY ON THE POWER STRIP BEFORE ADDING A NEW DEVICE TO THE CIRCUIT.
5. DIMENSIONS IN PARENTHESES ARE METRIC (mm).

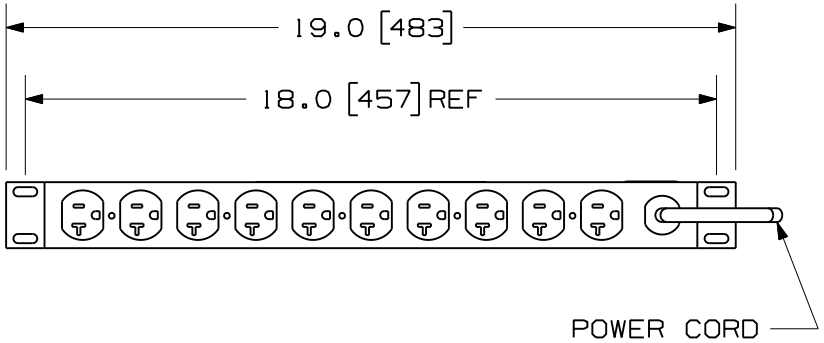

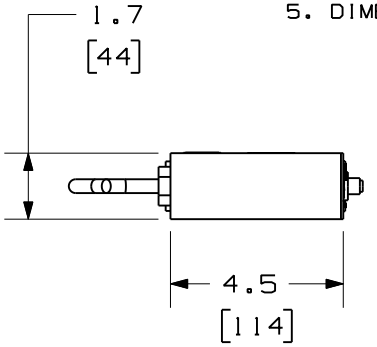

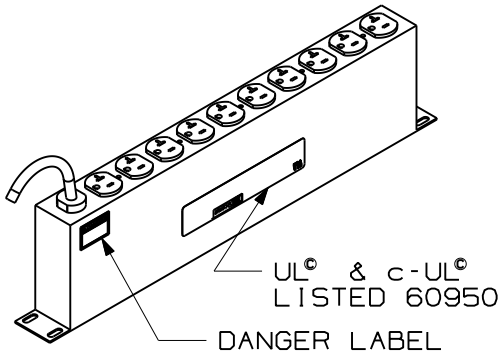

MODEL FILENAME: V10341BA_CMRPSH20CM_00.PRT

CAD FILENAME/LAYERS: V10341BA_DC_00B.PRT

PANDUIT CORP. TINLEY PARK, ILLINOIS

1RU 19" HORIZONTAL POWER STRIP
20 AMP 125V (CMRPSH20CM)
CUSTOMER DRAWING

UNLESS OTHERWISE SPECIFIED, DIMENSIONAL TOLERANCES ARE:

INCHES		[METRIC - MILLIMETER]		ANGLE
X.X	± 0.06	X.	± 1.5	± 1°
X.XX	± 0.03	X.X	± 0.8	
X.XXX	± 0.015	X.XX	± 0.4	

UNLESS OTHERWISE SPECIFIED, ALL DIMENSIONS ARE GIVEN IN INCHES, THIRD ANGLE PROJECTION.

REV	DATE	BY	CHK	DESCRIPTION	ECN - R	CUST	SUP	OTH
00B	4-29-09	MRWA	MCIS	C. NOTE 3 WAS TEN (10) - NEMA 5-20R RECEPTACLES B. ADDED DANGER LABEL AND TEXT A. ADDED COPYRIGHT AND TEXT TO UL LABEL	10341-02	KRKE		
00A	7-10-07	LEE		RELEASED TO PRODUCTION	10341-02			

DRAWN BY: LEE
DATE: 7-10-07
CHK'D: MCIS
MAT'L: COLD-ROLLED STEEL
SCALE: NONE
DRAWING NO.: 10341-02
DWG SIZE: A