THIS COPY IS PROVIDED ON A RESTRICTED BASIS AND IS NOT TO BE USED IN ANY WAY DETRIMENTAL TO THE INTERESTS OF PANDUIT CORP.

PANDUIT P/N	WEIGHT
OCFC10	3.12 LB/100 PCS (1418g/100 PCS)

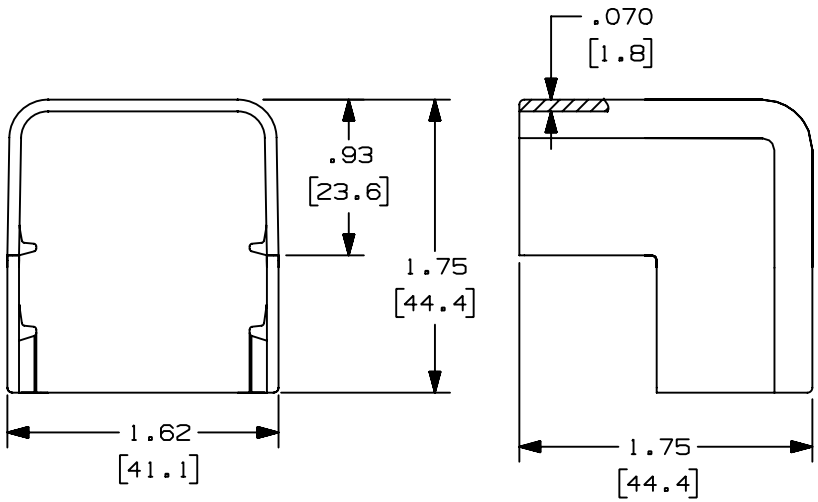

NOTES:
1. SEE CURRENT CATALOG FOR ADDITIONAL PART NUMBER SUFFIXES TO INDICATE COLOR AND OR PACKAGE QUANTITY.
2. SEE CATALOG FOR COMPLETE LIST OF PARTS APPLICABLE FOR USE WITH THIS PART.
3. DIMENSIONS IN PARENTHESES ARE IN METRIC.

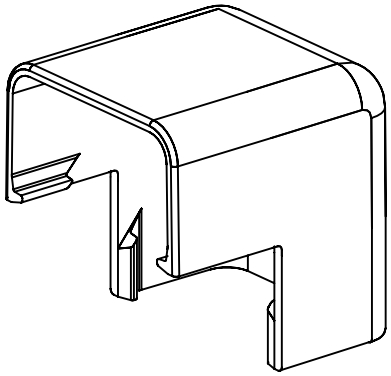

THIS DRAWING SUPERSEDES SS-17777(A).

REV	DATE	BY	CHK	DESCRIPTION	ECN	CHK	CUST	SUP
--	---	---	---	A. REV'D P/N: WAS OCF10	-----	---		
1	04-25-96	JBA	CEF	REVISED DRAWING REV LEVEL, ADDED SIGN-OFFS	35013-12	CEF	CEF	
R	07-25-95	DW	CEF	RELEASED TO PRODUCTION.	35013-12	CEF		

CAD FILENAME/LAYERS: D35013DL_ROCF10_01.PRT

PANDUIT CORP. TINLEY PARK, ILLINOIS

OUTSIDE CORNER FITTING (OCFC10)
CUSTOMER DRAWING

UNLESS OTHERWISE SPECIFIED, DIMENSIONAL TOLERANCES ARE:
(.X) ± (.XXX) ±.010(.3)
(.XX) ±.03(.8) ANGLES ±

UNLESS OTHERWISE SPECIFIED, ALL DIMENSIONS ARE GIVEN IN INCHES, THIRD ANGLE PROJECTION.

DRAWN BY: DW
DATE: 07-25-95
CHECKED BY: CEF
MAT'L: PVC
SCALE: NONE
DRAWING NO.: 35013-12
DWG SIZE: A