samtec

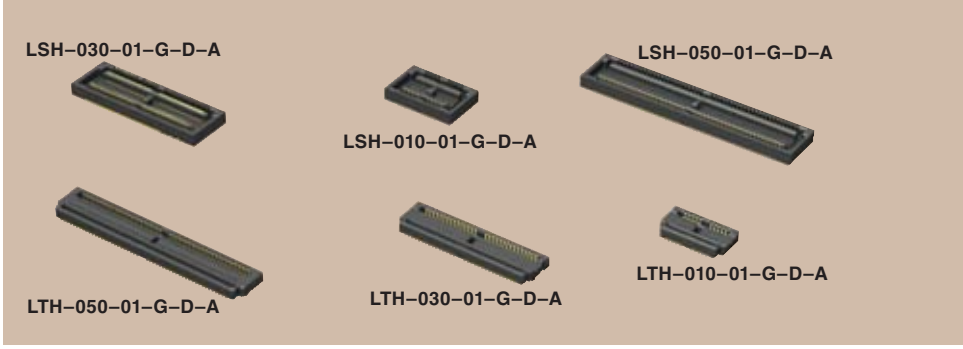

(0,50mm) .01969"

LTH, LSH SERIES

LOW PROFILE BLADE AND BEAM

SPECIFICATIONS

For complete specifications and recommended PCB layouts see www.samtec.com?LTH or www.samtec.com?LSH

Insulator Material:
Liquid Crystal Polymer

FILE NO. E111594

Terminal Material:
Phosphor Bronze
Contact Material:
BeCu
Plating:
Au over 50µ" (1,27µm) Ni
Current Rating:
1.5A @ 80°C ambient
Operating Temp Range:
-55°C to +125°C
RoHS Compliant:
Yes

Processing:

Lead-Free Solderable:
No
SMT Lead Coplanarity:
(0,10mm) .004" max
Board Stacking:
For applications requiring more than two connectors per board, contact ipg@samtec.com

MATED HEIGHT

LEAD STYLE	MATED HEIGHT*
–01	(2,31) .091

*Processing conditions will affect mated height.

Note: Samtec recommends right-side-up, single-pass 63/37 Tin/Lead reflow soldering for these connectors. This product is not compatible with lead-free reflow soldering.

Note: Some lengths, styles and options are non-standard, non-returnable.

LTH – NO. OF POSITIONS PER ROW – 01 – PLATING OPTION – D – A – OTHER OPTION

Mates with: LSH

–010, –020, –030, –040, –050

–G = 10µ" (0,25µm) Gold

–K = (5,50mm) .217" DIA Polyimide Film Pick & Place Pad

–TR = Tape and Reel

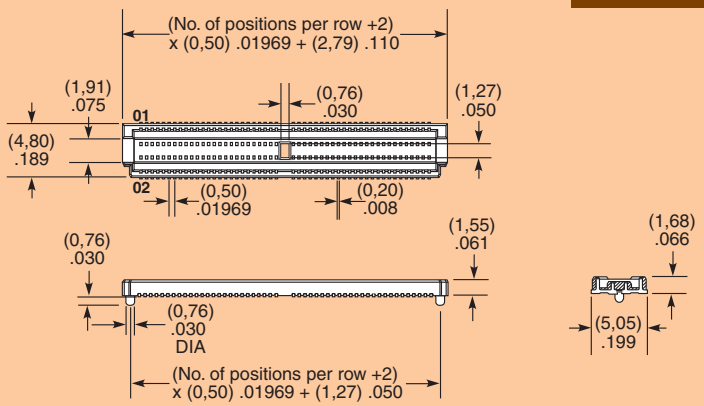

LSH – NO. OF POSITIONS PER ROW – 01 – PLATING OPTION – D – A – OTHER OPTION

Mates with: LTH

–010, –020, –030, –040, –050

–G = 10µ" (0,25µm) Gold

–K = (7,50mm) .295" DIA Polyimide Film Pick & Place Pad

–TR = Tape and Reel

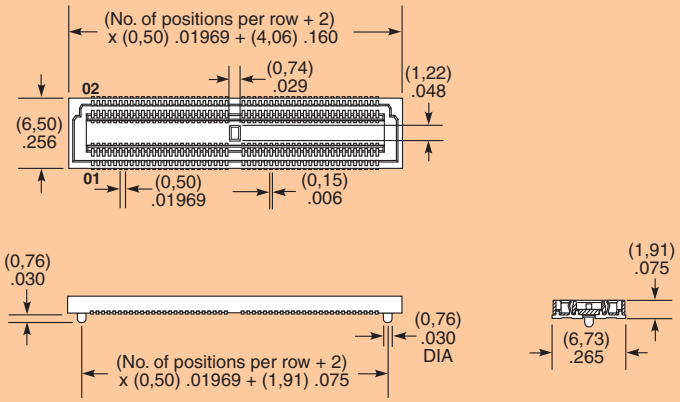

Due to technical progress, all designs, specifications and components are subject to change without notice.