THIS DRAWING IS UNPUBLISHED. RELEASED FOR PUBLICATION -.- .
© COPYRIGHT - BY TYCO ELECTRONICS CORPORATION. ALL RIGHTS RESERVED.

LOC	DIST
AD	00

REVISIONS

P	LTR	DESCRIPTION	DATE	DWN	APVD
	A1	REVISED PER ECO-10-008611	24APR10	HMR	NE

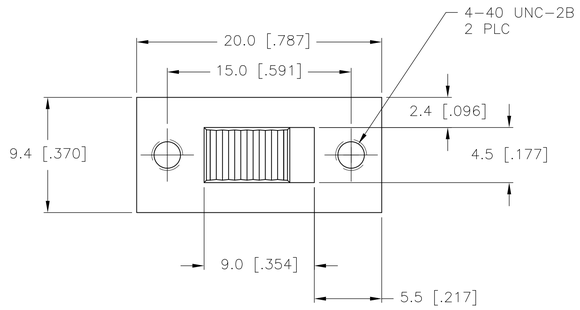

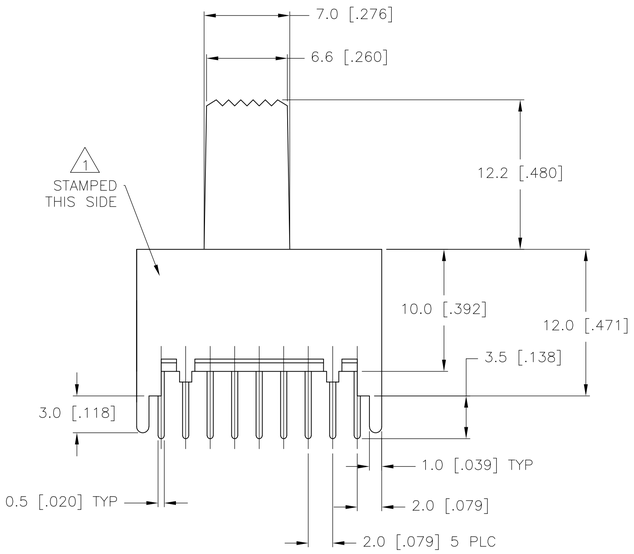

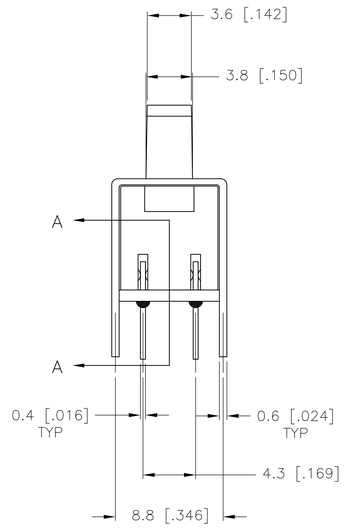

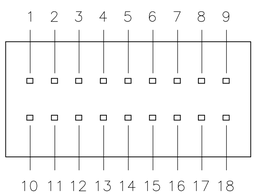

SPECIFICATIONS
MAKE-BEFORE-BREAK

MATERIALS:
ACTUATOR- POM, UL94HB BLACK
TERMINAL BOARD- PHENOLIC LAMINATED SHEET, UL94HB, NATURAL
FRAME- STEEL, NICKEL PLATE
TERMINAL/FIXED CONTACT- COPPER ALLOY, GOLD OR SILVER OVER NICKEL PLATE
MOVING CONTACT- COPPER ALLOY, GOLD OR SILVER OVER NICKLE PLATE
DETENT BALL- STEEL
COIL SPRING- GALVANIZED SPRING WIRE
SEAL- EPOXY

ELECTRICAL:
CONTACT RATING- .4VA@20VDC OR PEAK AC (GOLD); 300mA@125V AC (SILVER)
INITIAL CONTACT RESISTANCE- 30 milliohm max.
FINAL CONTACT RESISTANCE- 100 milliohm max. (AFTER TEST)
INSULTAION RESISTANCE- 1,000 Megohms min.
DIELECTRIC STRENGTH- 500V RMS@SEA LEVEL
LIFE EXPECTANCY- 15,000 CYCLES MIN.

MECHANICAL:
ACTUATION FORCE- 600+/-300 GRAMS
TRAVEL- 2.0 +/-.50 (.079 +/-.020)

ENVIRONMENTAL:
OPERATING TEMPERATURE- -20 TO +85 DEGREES C
STORAGE TEMPERATURE- -40 TO +100 DEGREES C
RESISTANCE TO SOLDER HEAT PER 109-202, CONDITION B
SOLDERABILITY PER EIA-364-52, CLASS 2, CATEGORY 1, 95% MIN COVERAGE

NOTES:

1. COUNTRY OF ORIGIN AND TE LOGO LOCATED APPROXIMATELY AS SHOWN
2. ALL MATERIALS AND FINISHES SHALL COMPLY WITH EU DIRECTIVE 2002/95/EC OF 27JAN2003 (ROHS)
3. ANTI SOLDER WICK SEAL AT TERMINAL TO BOARD INTERFACE
4. ALL PERFORMANCE TESTING WAS DONE IN ACCORDANCE TO TYCO SPECIFICATION 102-2469

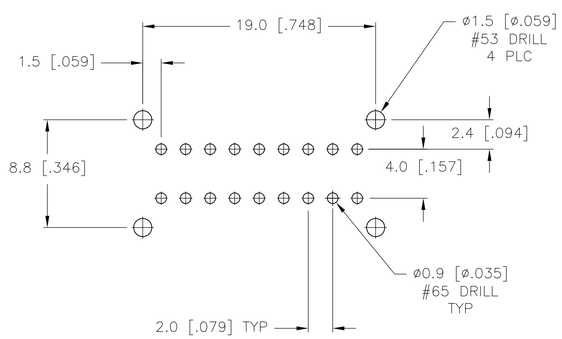

RECOMMENDED BOARD LAYOUT

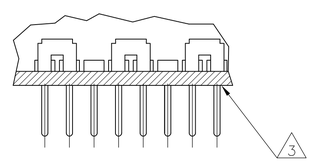

SECTION A-A

TE PART NO.	T&B PART NO.	PLATING		
-	MSS6250G04	GOLD	2 - 1 11 - 10 5 - 4 14 - 13 8 - 7 17 - 16	2 - 3 11 - 12 5 - 6 14 - 15 8 - 9 17 - 18
1825272-1	MSS625004	SILVER	2 - 1 11 - 10 5 - 4 14 - 13 8 - 7 17 - 16	2 - 3 11 - 12 5 - 6 14 - 15 8 - 9 17 - 18
			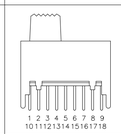	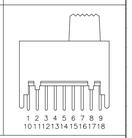

TERMINALS CONNECTED WHEN SLIDE IS IN POSITION SHOWN.

THIS DRAWING IS A CONTROLLED DOCUMENT.

DIMENSIONS: mm

TOLERANCES UNLESS OTHERWISE SPECIFIED:
0 PLC ± -
1 PLC ± 0.3 [.012]
2 PLC ± -
3 PLC ± -
4 PLC ± -
ANGLES ± -

MATERIAL -
FINISH -

DWN R BROWN 21DEC05
CHK M SARVER 21DEC05
APVD M SARVER 21DEC05
PRODUCT SPEC -
APPLICATION SPEC -
WEIGHT -

Tyco Electronics
Tyco Electronics Corporation
Harrisburg, Pa 17105-3608

NAME SLIDE SWITCH, MSS 6250 SERIES, 6P-DT
-

SIZE	CAGE CODE	DRAWING NO	RESTRICTED TO
A1	00779	C-1825272	-

CUSTOMER DRAWING | SCALE 4:1 | SHEET 1 OF 1 | REV A1

AMP 4805 REV 31MAR2000

Downloaded from Arrow.com.