ITEM NO.	PART NUMBER	DESCRIPTION	QTY.	COMPONENT NOTES
1	50-00550	Connector, 4.75x10.2mm SAE, brass nickel plated, molding type	1	
2	30-00792	Wire, 2C TS, 16 AWG, UL2651, 300V, 105C, 4.8 mm, VW-1, PVC, red and black	1	
3	24-00176	Overmold, SAE connector, PVC, black	1	black, 105 °C
4	55-00059	Dust cap, SAE connector, overmold fit	1	black, 105 °C

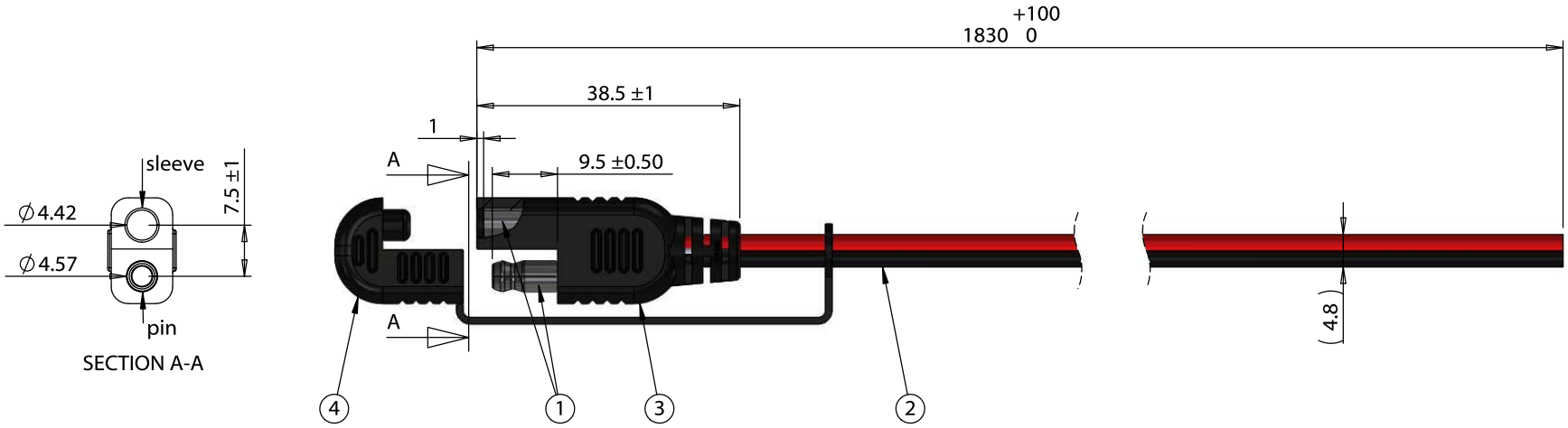

Wiring Diagram	
50-00550	wire color
sleeve	red (+)
pin	black (-)

Notes:
Functionally equivalent components may be substituted

Revision:	Date:	Description:
A	1/16/2017	Initial release

Prepared: PS — Digitally signed by PS Date: 2017.08.11 13:52:38 -07'00'

Verified: GL — Digitally signed by GL Date: 2017.08.11 14:12:09 -07'00'

Dimensions are in millimeters.
Tolerances:
X: ± 0.5 mm
X.X: ± 0.3 mm
X.XX: ± 0.05 mm

Notes:

RoHS compliant

Function test: no open, no short circuit, no intermittent

Description:

Cable, 1830 mm, 50-00550 SAE to blunt cut, 16 AWG, UL2651, 30-00792, R-B wire, black to SAE pin

TENSILITY
tel 1.541.323.3228 800 877.670.7118
fax 1.541.323.4202 web tensility.com

Size: A
Part number: 10-02409
Scale: 1:1
Sheet 1 of 1

5 4 3 2 1