ITEM NO.	PART NUMBER	DESCRIPTION	QTY.	COMPONENT NOTES
1	TLY-1P	NEMA 1-15P, polarized	1	black overmold
2	TLY-22S	C7	1	black overmold
3	30-00246	Wire, 2C, 18 AWG, UL SPT-2, 300V, 105C, 7.05 mm, VW-1, PVC	1	
4	Label	Adhesive flag, 15x100mm	1	white with black font

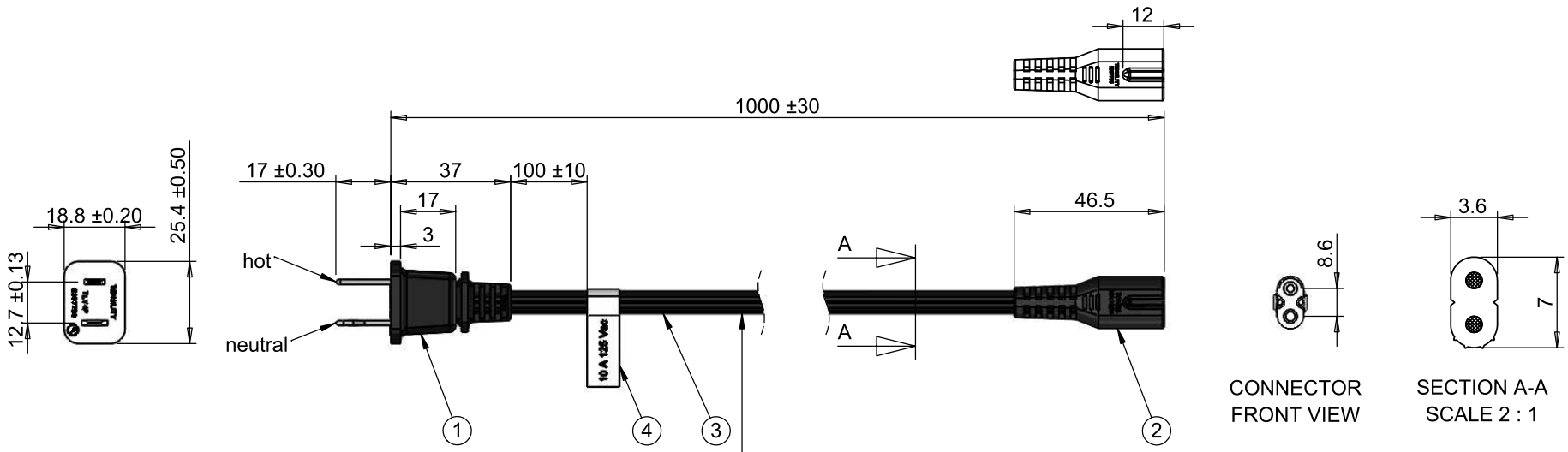

Wire marking: (UL) E339575 SPT-2 2X0.824mm2
(18AWG) 105C 300V VW-1 C(UL) SPT-2 2X0.824mm2
(18AWG) 105C 300V VW-1 TENSILITY HLE

Wiring Diagram	
TLY-1P	wire
hot	round
neutral	grooved

Notes:
Electrical requirements: 10 A at 125 Vac

Revision:	Date:	Description:
A	12/20/2016	Initial release

Prepared: DN Digitally signed by DN Date: 2017.01.26 13:37:50 -08'00'

Verified: PS Digitally signed by PS Date: 2017.01.26 16:14:39 -08'00'

Dimensions are in millimeters.
Tolerances:
X: ± 0.5 mm
X.X: ± 0.3 mm
X.XX: ± 0.05 mm

Notes:
RoHS compliant
Function test: no open, no short circuit, no intermittent

Description:
Ac cord, 1000 mm, U.S, NEMA 1-15P plug, TLY-1P to C7, TLY-22S, 18 AWG, SPT-2 wire, 30-00246

TENSILITY
tel 1.541.323.3228 800 877.670.7118
fax 1.541.323.4202 web tensility.com

Size: A
Part number: 11-00034
Scale: 1:2
Sheet 1 of 1

5 4 3 2 1